“Engineering Project Portfolio”

1. Low Speed Open Circuit Wind Tunnel Construction and Setup

Duration: September 2022 – July 2023
Organization: National Innovation Center (NIC), Nepal
Collaboration: Ministry of Education, Science and Technology, Nepal
Project Type: Team-based engineering research and construction project

Objective:

To design, construct, and commission Nepal’s largest and first of its kind low-speed open-circuit subsonic wind tunnel for experimental aerodynamic analysis of UAVs, rockets, vehicles, and architectural models.

Team Contribution:

This was a collaborative effort involving mechanical, aerospace, and electronics engineers. The project was developed from concept to commissioning at NIC's facility in Kirtipur, Kathmandu.

My Role and Responsibilities:

- Contributed to the overall design and layout of the wind tunnel sections including test section, contraction nozzle, and diffuser.
- Handled material sourcing and procurement coordination with vendors.
- Assisted in the assembly and integration of structural components.
- Participated in prototype, smoke visualization, and initial flow calibration.
- Involved in documentation and reporting.

Technical Parameters:

Parameter	Value
Type	Open-Circuit, Subsonic Wind Tunnel
Operating Regime	Subsonic (Mach ≤ 0.4)
Drive Section	1070 mm axial fan
Test Section Area	600 mm × 600 mm (0.36 m^2)
Test Section Length	1200 mm
Max Test Section Velocity	60 m/s
Total Tunnel Length	8 meters
Contraction Ratio	9:1

Instrumentation & Features:

- 6-component force balance system.
- Pitot tube anemometer and differential manometer.
- Electric smoke generator for flow visualization.

- Honeycomb flow straighteners and mesh screens in the settling chamber.
- Transparent acrylic test section for monitoring.

Construction Highlights:

- Scaled prototype 3D printed and tested with smoke for flow diagnostics.
- Fabricated with Mild Steel; acrylic used in the test section.
- Tunnel housed in a dedicated 15×6 m lab facility built at NIC.
- Final integration included sealing, surface smoothing, and paint coating for minimum drag.

Outcomes:

- Successfully commissioned a fully functional wind tunnel, the largest and first of its kind in Nepal.
- Enables validation of CFD simulations, aerodynamic testing of drone and rocket prototypes, and architectural flow studies.
- Opened avenues for academic collaboration and student research at NIC.

Process flow illustrations:

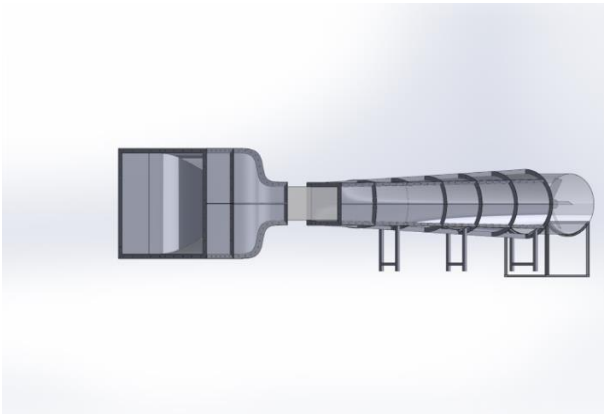

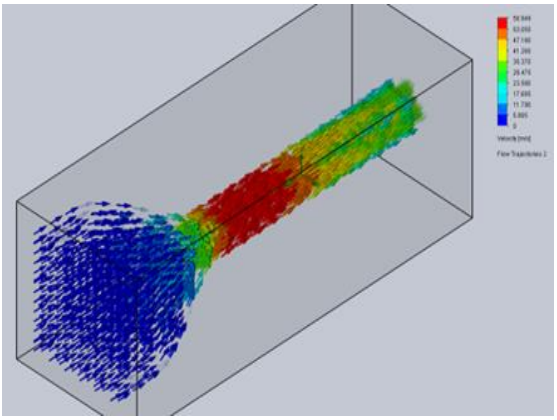

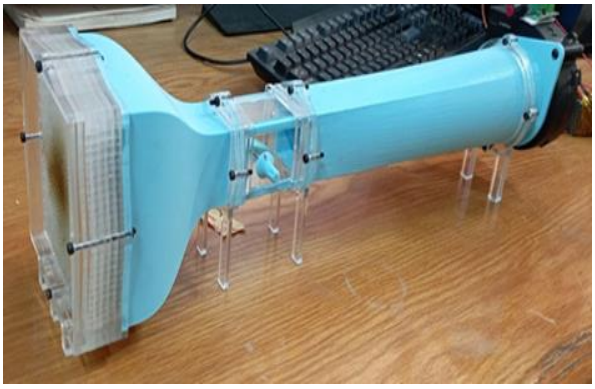

Graphs obtained during calibration:

1. Frequency vs velocity inside test section
2. Frequency vs RPM of drive section

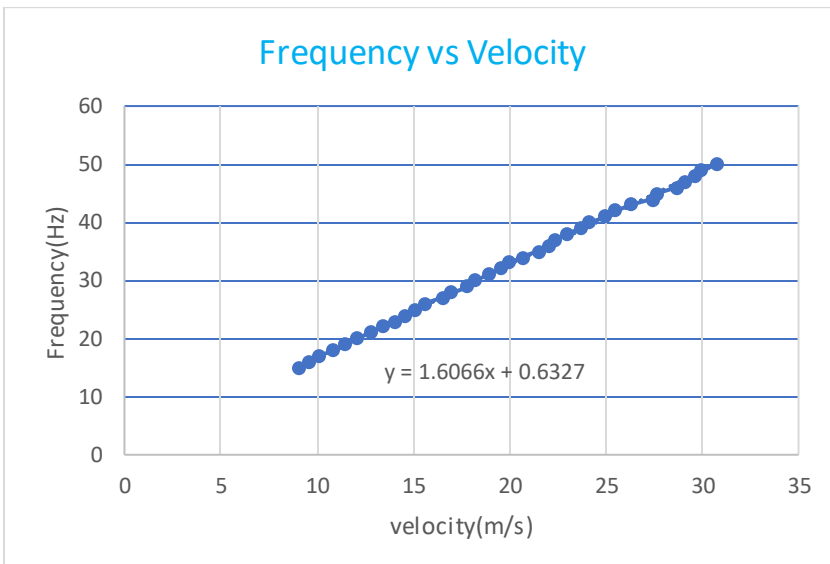

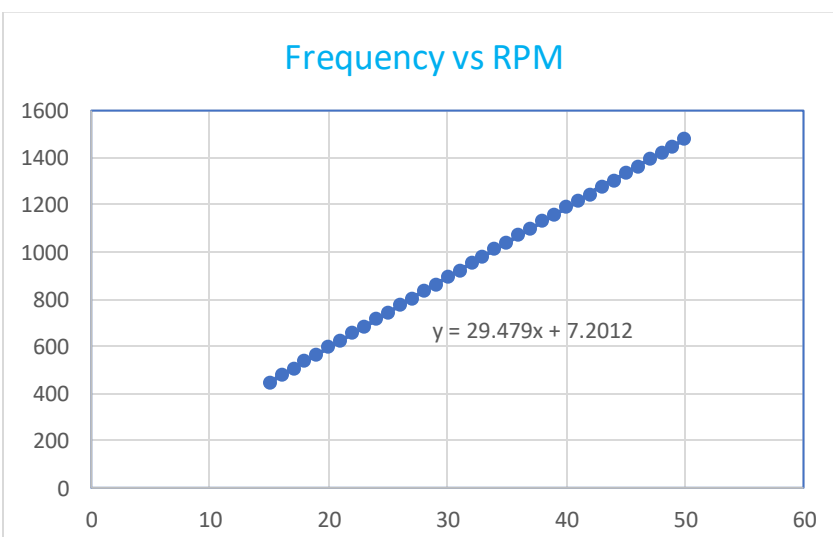

2. Feasibility Study of High-Altitude Logistics Delivery Using Multirotor UAVs

Duration: October 2024 – Present
Organization: National Innovation Center, Nepal
Collaboration: Nangi Community Lodge, Myagdi District
Project Type: UAV application for rural logistics and disaster resilience

Objective:

To develop a drone-based logistics system capable of transporting essential goods (e.g., food, medicine) between remote high-altitude lodges where ground connectivity is unreliable.

Team Contribution:

This was a field-tested project executed in collaboration with local communities. The mission focused on validating feasibility and improving performance for high-elevation, short-range autonomous UAV delivery.

My Role and Responsibilities:

- Conducted feasibility analysis of environmental, technical, and payload constraints.
- Managed material sourcing and structural customization of the UAV platform for high-altitude conditions.
- Integrated flight control systems, battery, and propulsion components.
- Developed optimized flight path considering terrain, energy consumption, and safety margins.
- Participated in field testing and data logging during real flights.

Mission Profile:

Parameter	Specification
Payload Capacity	10 kg
Flight Altitude Range	2,680 m → 3,330 m
One-way Range	4.5 km
Nominal Wind Speed	6 m/s

Findings:

- Thermal insulation of batteries is critical to prevent performance degradation in cold environments.
- Payload mechanism redesign is needed to adapt to different package types and terrain-based landing needs.
- Descent speed control is essential for safe delivery and rotor performance in thin air.
- Flight success is sensitive to sudden gusts and updraft zones common in hilly terrain.

On-site Testing visuals:

Fig: Multirotor UAV ready for Takeoff(with payload)

Fig: Takeoff with Payload

3. Design and Development of a Bungee Cord–Based Launcher for Fixed-Wing UAVs

Duration: *April 2023 – May 2023*
Organization: National Innovation Center, Nepal
Project Type: Mechanical launch system development for field UAV deployment

Objective:

To design a low-cost, reliable bungee (elastic cord) launcher system capable of launching fixed-wing UAVs in terrain-constrained areas where hand launch is not feasible.

My Role and Responsibilities:

- Calculated launch energy requirements based on UAV mass and desired velocity.
- Selected and sourced elastic cord material with appropriate stiffness and stretch profile.
- Designed the frame structure and Slider using lightweight, field-friendly materials.
- Assisted in Fabrication, assembly, safety testing, and test launches using UAV prototypes.

Technical Highlights:

- **Launch Force Source**: Bungee cord (elastic latex tubing)
- **Launch Velocity Achieved**: 13-15 m/s (adjustable based on UAV and Cord)
- **Compatible UAVs**: 3–6 kg fixed-wing aircraft
- **Frame Material**: Lightweight aluminum
- **Trigger System**: Both mechanical and electronically operated release with safety pin

Results & Outcomes:

- Successfully launched a fixed-wing UAV prototype.
- Easy field deployment in areas without runways.
- The elastic cord material degraded over repeated use, leading to a noticeable reduction in launch velocity and energy output.

Intitial testing:

Figure : Testing of UAV launcher

Calculated Data Graphs:

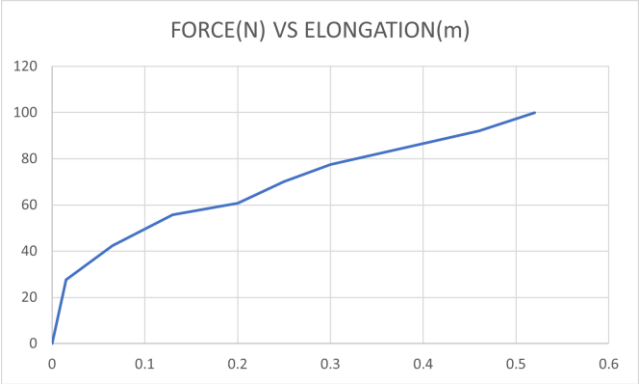

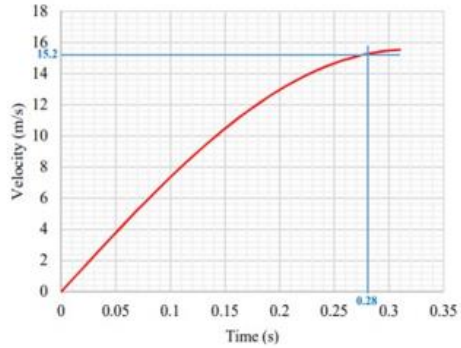

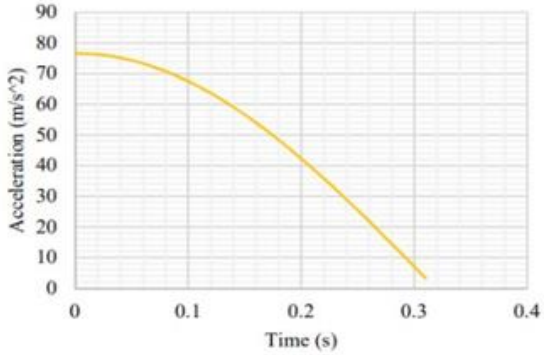

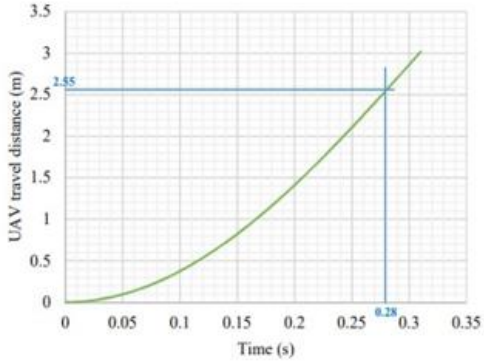

3. Development of Modular Payload Unit for UAV

Duration: November 2022 – February 2023
Organization: National Innovation Center, Nepal
Project Type: UAV-based Payload Mechanism R&D

Objective:

To design, fabricate, and validate a modular, autonomous payload box system for drone-based delivery of life-saving medical supplies in remote regions.

My Role and Responsibilities:

- Performed CAD design and ANSYS analysis for structural integrity.
- Calibrated servo timing and limit switches for automated door cycles.
- Tested under dynamic wind conditions to ensure reliable operation.
- Improved manufacturability through use of balsa-core composites.

Technical parameters:

Parameter	Value
Payload Volume	390 × 280 × 150 mm
Payload Capacity	2 kg
Total Unit Weight	3 kg
Structure Material	Carbon Fiber + PLA
Lock Mechanism	Servo-actuated
Retraction System	Dual gear motors with timing belt
Operation Mode	Manual and automatic
Opening Time	0.2 sec
Closing Time	1.8 sec
Max Current	1.2 A

Instrumentation & Features:

- Modular locking, limit, and retraction subsystems
- Printed PLA doors and CNC-machined carbon fiber casing
- Manual override enabled with safety lockouts
- Closed-loop control with real-time door state monitoring

Construction Highlights:

- 3D printed components and tested spring-loaded doors
- CNC-cut carbon fiber sheets assembled modularly
- Tuned belt retraction system for aerodynamic resistance
- Manual calibration of timing and positioning mechanisms

Outcomes:

- Functional, autonomous payload system deployed in field UAVs.
- Tested successfully under dynamic airflow up to 20 m/s.
- Improved delivery reliability for high-altitude missions.

CAD Design (screenshot):

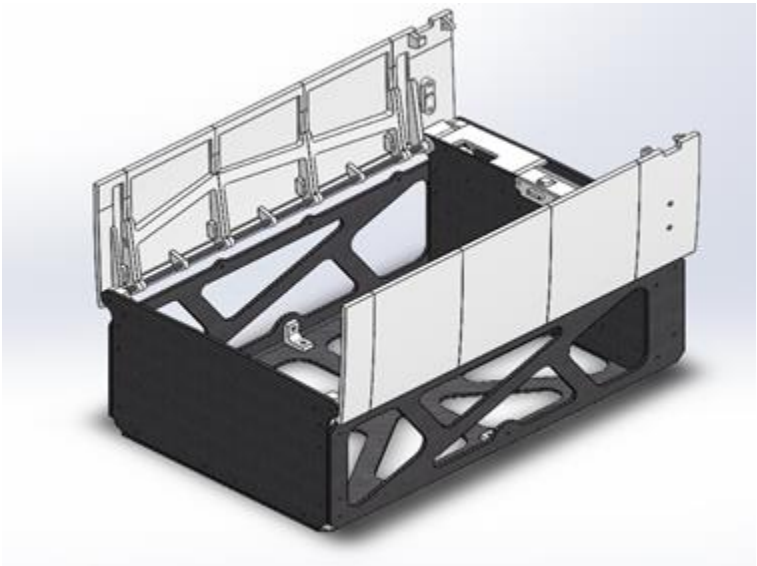

Figure: CAD model of payload box

Fabricated Model:

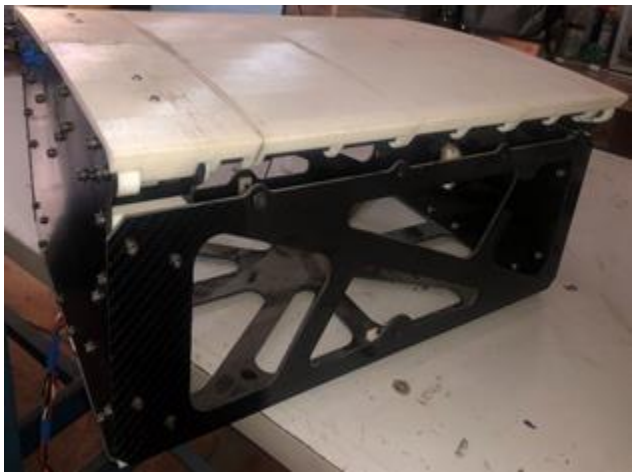

Figure: Fabricated payload box (closed)

Figure: Fabricated payload box (open)

5. High-Altitude UAV System for Medical Delivery in Remote Regions

Phase 1 – Fixed-Wing UAV Development

Duration: June 2022 – September 2023
Objective: Develop UAVs for high-altitude medical delivery missions.
Key Contributions:

- Designed and fabricated fixed-wing UAV prototypes as per Nepal's mountainous terrain.
- Developed a bungee cord–based launcher system to enable launch from constrained terrains.
- Implemented parachute-based recovery system for safe landings.
- Conducted extensive flight tests and collected telemetry data using Mission Planner and Pixhawk flight controllers.
- Identified limitations such as runway dependence and stability of airframe.

Phase 2 – VTOL UAV Prototype

Duration: October 2023 – July 2024
Objective: To eliminate launch site limitations by transitioning to a VTOL platform.
Key Contributions:

- Designed and fabricated a modular VTOL UAV with swappable parts.
- Performed aerodynamic and structural analysis using XFLR5 and ANSYS.
- Integrated avionics such as Pixhawk cube orange, GPS, telemetry, ESC, servos.
- Conducted field tests at various altitudes (including up to 2,800+ meters).
- Validated vertical and fixed-wing mode transitions across changing atmospheric conditions.

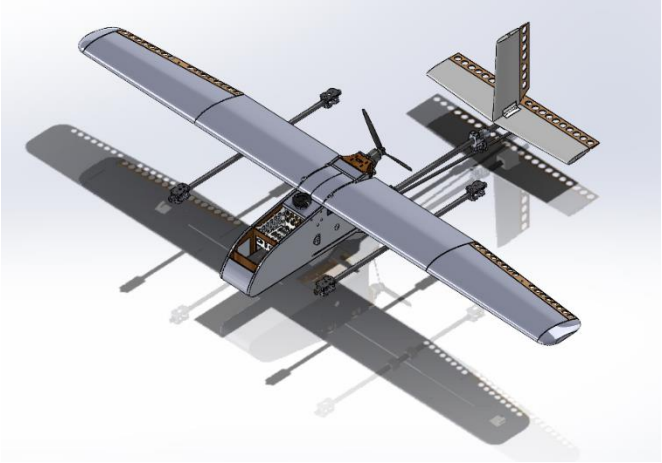

Fig: CAD Design VTOL

Fig: Fabricated Model

Phase 3 – Composite VTOL UAV Redesign

Duration: July 2024 – Present
Objective: To enhance performance with lightweight, durable materials for high-altitude operation.

Contributions:

- Working on the VTOL airframe using full carbon fiber composite structure.
- Contributing to layup, molding, and surface finishing during composite fabrication.
- Working on propulsion system selection and integration for improved endurance.
- Working on structural rigidity, weight-efficiency.

General sizing and parameters of VTOL UAV:

Parameter	Value
Type	VTOL UAV (Fixed-Wing + Quad)
Total Takeoff Weight	15kg (including payload)
Payload Capacity	2 kg
Wingspan	3 m
Wing Area	0.892 m^2
Aspect Ratio	10.71
Wing Loading	17.88 kg/m^2
Root Chord	0.312 m
Tip Chord	0.265 m
Stall Speed	17.06 m/s (~61.4 km/h)
Cruise Speed	23.48 m/s (~84.5 km/h)
Power System	Dual 22000 mAh Li-ion Batteries
Flight Controller	Pixhawk cube orange
Companion Computer	Raspberry Pi
Avionics	GPS, GSM Module, Telemetry, Servos
Materials Used	Carbon Fiber, Plywood, PLA
Operating Altitude	Up to 4000 m

Tools & Technologies:

- **CAD & Simulation:** SolidWorks, XFLR5, ANSYS
- **Avionics:** Pixhawk cube orange, Mission Planner, Telemetry, GPS, ESC
- **Materials:** Carbon fiber, PLA (3D print), plywood, foam, fiberglass
- **Flight Data Analysis:** Mission Planner, log interpretation

Wing & Tail Design and Fabrication:

Wing CAD models(screenshots):

Fig: Right wing shell CAD model

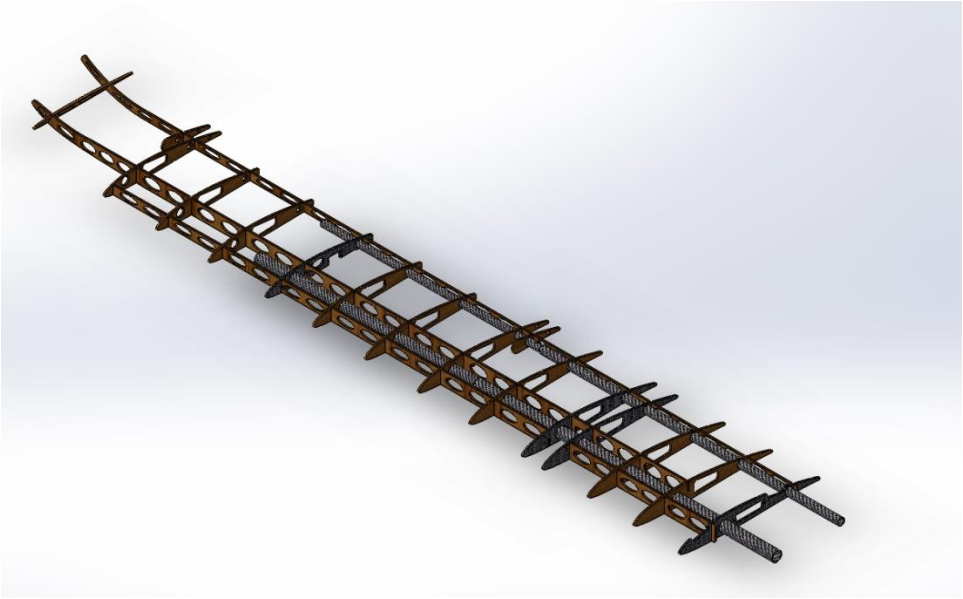

Fig: Right wing internal structure

Fig: Fabricated internal structure of right wing

Tail CAD models(screenshots):

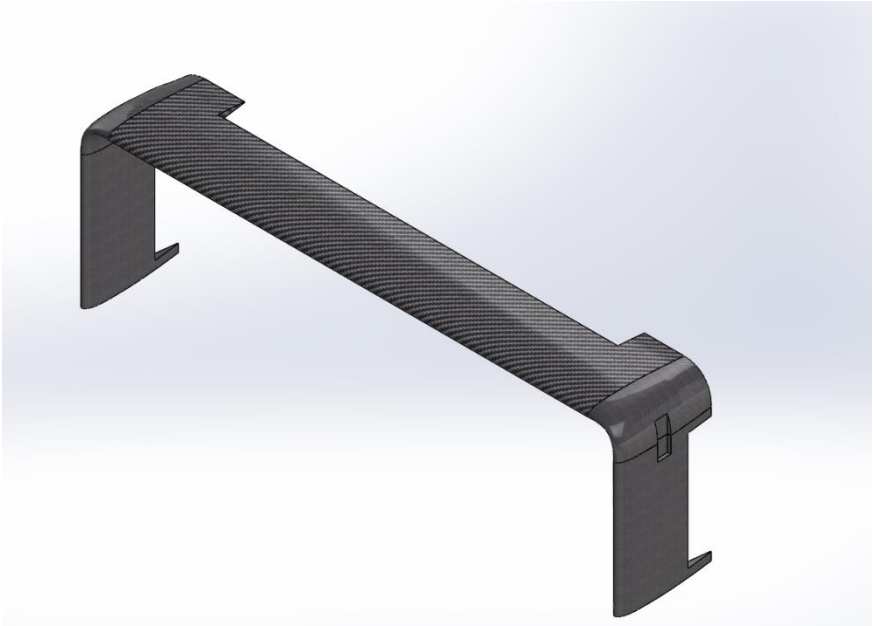

Fig: Tail shell CAD model

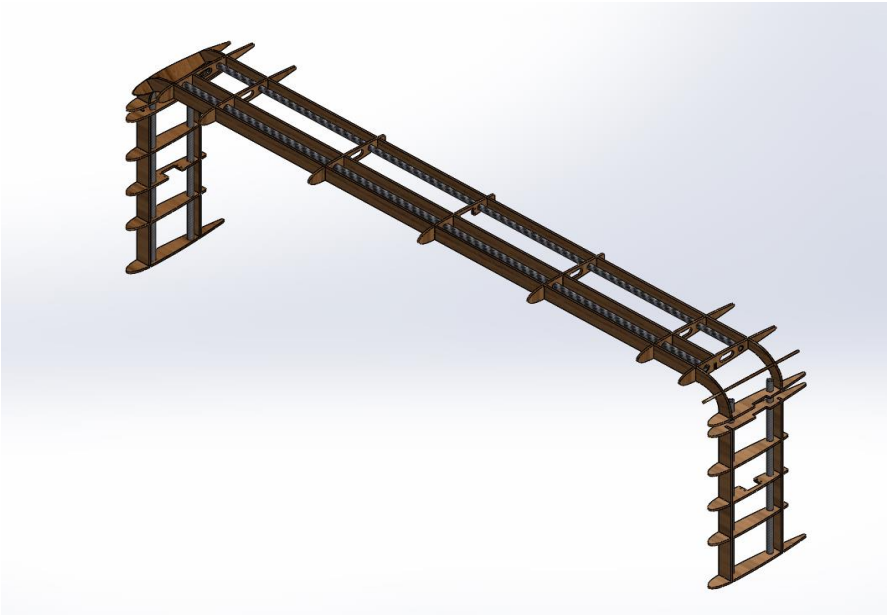

Fig: Tail internal structure

Fig: Fabricated Tail internal structure

4. Academic Project: Design & Analysis of a Flying Wing UAV

Goal: Investigate the impact of winglet angle and air velocity on aerodynamic performance to optimize UAV efficiency.

Methodology:

- **Design:** Created a UAV model using SolidWorks (CAD).
- **Simulation:** Analyzed aerodynamics in XFLR5 (for lift/drag coefficients) and ANSYS (for stability and flow dynamics).
- **Key Parameters:** Evaluated aerodynamic coefficients such as CL, CD, Cm, and CL/CD ratios across winglet angles (2°, 4°, 6°) at varying velocities.

Results & Insights:

- **Optimal Performance:** Achieved highest lift-to-drag ratio (CL/CD=19.88) at 4° angle of attack (14.16 m/s cruise speed).
- **Stability Challenge:** Rising pitching moment (Cm) with angle increase, requiring design adjustments for neutral stability.

Contribution:

- Led design and simulation.
- Identified relation between lift, drag, and stability for future BWB-UAV iterations.

Technical Tools: SolidWorks, XFLR5, ANSYS.

Aerodynamic parameters at various angle of attacks:

Result	**At 2°**	**At 4°**	**At 6°**
Cruise speed (v)	18.93 m/s	14.16 m/s	11.81 m/s
C_L	0.200	0.358	0.515
C_D	0.012	0.018	0.026
C_L / C_D	16.667	19.88	19.80
C_m	0.020	0.038	0.055